SPAIN
Corporate Headquarters

Zueco Y Technology S.L.
Pol. Ind. Centrovía
C/ R. Janeiro, 12
50198 La Muela (Zaragoza)
Spain
Tel. + 34 976 141819
Fax + 34 976 141818
info@zytechsolar.com

www.zytechsolar.com

Zytech Solar is part of the Zytech Group.

Zytech Solar is part of the Zytech Group, a Spanish group of companies with an international presence whose activities take place on five continents. It specialises in the production of photovoltaic modules, building integrated photovoltaic (BIPV) systems and off-grid photovoltaic systems, whilst other group companies are devoted to the manufacture of mini wind turbines (Zytech Aerodyne), solar streetlamps, solar thermal energy equipment and electric vehicles (Zytel).

Photovoltaic modules

Maximum quality, efficiency and reliability.

www.zytechsolar.com

European quality, best prices

ZYTECH PHOTOVOLTAIC MODULES

Maximum quality, efficiency and reliability.

Modules with the best value for money and after-sales service

Zytech photovoltaic modules deliver extremely high quality, efficiency and robustness in addition to excellent value for money. This quality has been recognised by hundreds of customers looking to create installations with a reliable and long-lasting product, which allows for the fastest and safest return on investment.

Zytech provides the added value of technical consulting for all of its customers and installers and offers a fast and effective after-sales service.

Features of Zytech photovoltaic modules

Zytech photovoltaic modules are tested in laboratories authorised in accordance with the IEC 61215 standard. Suitability for areas with significant ice and snow accumulation is tested by progressively applying loads from 0 to 5.4 kN/m².

One of the most outstanding aspects of Zytech modules is their versatility. Our high-efficiency module production line adapts to the specific needs of each customer.

- The anodised aluminium frame provides robustness, convenience and simplicity during transport and installation. The modules can be easily connected via cables in series or parallel configurations to obtain the required power.

- The module front is made of tempered glass and provides the highest transparency, whilst also providing the necessary water-tightness and insulation to protect against water and humidity.

- The junction box is equipped with bypass diodes which completely eliminate the risk of hot-spot effects. These can also be replaced easily, given that they are not sealed in.

- The extremely robust cables and connection system offers excellent water resistance (TÜV, IP65).

- Excellent performance in low light conditions.

- Power output is guaranteed for 25 years and they are covered by a 5-year limited warranty against materials and manufacturing defects.

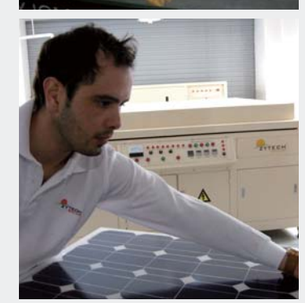

IN-HOUSE MANUFACTURING

Zytech photovoltaic modules are manufactured with monocrystalline and polycrystalline silicon cells on our production lines and are subjected to the most stringent quality controls. The resources devoted to R&D for ongoing product improvement, specialised manpower, state-of-the-art machinery and rigorous quality controls allow us to guarantee a European quality product at the best price.

The quality of Zytech modules has been confirmed by the inspection processes performed by GARRIGUES, an internationally renowned company which performs totally independent quality audits on Zytech's standard controls.

These inspections and laboratory tests allow us to ensure compliance of technical specifications, production processes, certificates and correct operation of the production plant in all of its procedures.

- Specialist manpower
- State-of-the-art machinery
- Quality controls and certificates

www.zytechsolar.com




APPLICATIONS

Because Zytech is a manufacturer with its own manufacturing plant, we can offer modules from 2 to 300W power with maximum flexibility that can adapt to the specific needs of any project, whatever size and location, whether for an off-grid or grid-connected installation.

GRID-CONNECTED INSTALLATIONS

In a growing number of countries there are government regulations which provide incentives for photovoltaic energy production via production premiums, tax incentives or electricity bill discounts. In these cases, the photovoltaic installations are connected to the grid and the energy produced is fed in and consumed at the nearest consumption points. This means that the energy is produced and consumed locally, avoiding unnecessary losses during grid transport.

Zytech modules are ideal for grid-connected installations given their high robustness and reliability, as well as their excellent value for money, which allows you to get the most out of your investment in any project from day one:

- Solar photovoltaic farms
- Photovoltaic installations on industrial, commercial, agricultural and livestock roofs...
- Domestic installations
- Building integrated installations

OFF-GRID AND HYBRID APPLICATIONS

In locations where there is no electrical grid, a correctly-sized off-grid photovoltaic installation with quality components is capable of supplying electricity for a host of applications: illumination, refrigeration, pumping, operation of household appliances, telecommunications systems, traffic signals, weather stations, sailing, caravanning... They consist of simple, low-maintenance systems.

These installations can be installed almost anywhere to permit things as important as a refrigerator for medicines in a rural hospital in Africa, illumination in a night school in a South American jungle, or a radio transmitter in high mountain areas. Zytech Solar off-grid systems are the perfect solution in almost any location, whether on boats, land vehicles, rural areas, the jungle, the desert or high mountain areas.

Zytech offers several types of system: conventional off-grid systems, hybrid systems – photovoltaic modules and mini wind turbines together – and special systems for solar pumping. In all cases, Zytech offers sizing services via calculation tools so that energy requirements are covered effectively without compromising efficiency. Zytech offers its customers all of the components required for an off-grid or hybrid system:

- **Photovoltaic modules**
- **Charge controllers**
- **Batteries**
- **Inverters**
- **Solar pumps**
- **Mini wind turbines**



Zytech monocrystalline PV module specifications

Wp (W)	Model	Voc (V)	Isc (A)	Vmp (V)	Imp (A)	Dimensions L×W×H (mm)	Weight (kg)	Cell alignment	Cell dimensions L×W (mm)	Efficiency
90	ZT90S	22.36	5.53	18.41	4.89	1201×545×35	7.0	4×9	125×125	13.75 %
95	ZT95S	22.46	5.62	18.72	5.07	1201×545×35	7.0	4×9	125×125	14.51 %
100	ZT100S	22.61	5.75	19.01	5.26	1201×545×35	7.0	4×9	125×125	15.28 %
105	ZT105S	24.96	5.62	20.80	5.05	1330×545×35	10.0	4×10	125×125	14.49 %
110	ZT110S	25.04	5.65	20.96	5.25	1330×545×35	10.0	4×10	125×125	15.18 %
115	ZT115S	27.46	5.62	22.88	5.03	1457×545×35	10.5	4×11	125×125	14.48 %
120	ZT120S	27.59	5.67	23.10	5.19	1457×545×35	10.5	4×11	125×125	15.11 %
130	ZT130S	30.05	5.65	25.15	5.17	1076×808×35	10.5	6×8	125×125	14.95 %
135	ZT135S	30.19	5.75	25.49	5.30	1076×808×35	10.5	6×8	125×125	15.53 %
140	ZT140S	33.64	5.61	27.92	5.01	1203×808×35	13.0	6×9	125×125	14.40 %
145	ZT145S	33.80	5.65	28.30	5.12	1203×808×35	13.0	6×9	125×125	14.92 %
150	ZT150S	33.91	5.75	28.51	5.26	1203×808×35	13.0	6×9	125×125	15.43 %
160	ZT160S	37.50	5.63	31.32	5.11	1330×808×35	13.0	6×10	125×125	14.89 %
165	ZT165S	37.68	5.71	31.56	5.23	1330×808×35	13.0	6×10	125×125	15.35 %
170	ZT170S	41.12	5.59	33.86	5.02	1453×808×35	15.0	6×11	125×125	14.48 %
175	ZT175S	41.25	5.63	34.45	5.08	1453×808×35	15.0	6×11	125×125	14.96 %
180	ZT180S	44.71	5.53	36.79	4.89	1580×808×40	16.0	6×12	125×125	14.10 %
185	ZT185S	44.86	5.59	36.94	5.01	1580×808×40	16.0	6×12	125×125	14.49 %
190	ZT190S	44.93	5.62	37.44	5.07	1580×808×40	16.0	6×12	125×125	14.88 %
195	ZT195S	45.07	5.65	37.73	5.17	1580×808×40	16.0	6×12	125×125	15.27 %
200	ZT200S	45.22	5.75	38.02	5.26	1580×808×40	16.0	6×12	125×125	15.67 %
205	ZT205S	45.29	5.75	38.23	5.36	1580×808×40	16.0	6×12	125×125	16.06 %
210	ZT210S	48.83	5.65	40.87	5.14	1707×808×40	17.0	6×13	125×125	15.23 %
220	ZT220S	49.06	5.75	41.42	5.31	1707×808×40	17.0	6×13	125×125	15.95 %
230	ZT230S	54.91	5.62	45.76	5.03	1453×1064×50	19.0	8×11	125×125	14.88 %
235	ZT235S	55.00	5.63	45.94	5.12	1453×1064×50	19.0	8×11	125×125	15.20 %
240	ZT240S	55.18	5.67	46.20	5.19	1453×1064×50	19.0	8×11	125×125	15.52 %
250	ZT250S	59.81	5.61	49.63	5.04	1590×1064×50	21.0	8×12	125×125	14.78 %
260	ZT260S	60.10	5.65	50.30	5.16	1590×1064×50	21.0	8×12	125×125	15.37 %
270	ZT270S	60.38	5.75	50.98	5.30	1590×1064×50	21.0	8×12	125×125	15.96 %

ZT 180S/185S mono

ZYTECH MODULES

Cells	
Cell Technology	Monocrystalline silicon
Number of cells per module	72
Cell dimensions	125 × 125 mm

Mechanical Data	
Dimension of the module L×W×H	1580×808×40mm
Weight	16 kg

Electrical data		ZT 180S	ZT 185S
Maximum power	P_{max}	180 W	185 W
Open Circuit Voltage	V_{oc}	44.71 V	44.86 V
Maximum power point voltage	V_{mpp}	36.79 V	36.94 V
Short circuit current	I_{sc}	5.53 A	5.59 A
Maximum power point current	I_{mpp}	4.89 A	5.01 A
FF Factor		72.80 %	73.77 %
Module Efficiency		14.10 %	14.49 %

* At Standard Conditions (STC) Irradiance 1000 watt/m², spectrum AM 1,5 at a cell temperature of 25°C.

Thermal data	
NOCT	47°C ± 2°C
Temperature Coefficient of V_{oc}	- (140 ± 5) mV/°C
Temperature Coefficient of I_{sc}	+ (0.03 ± 0.02) %/°C
Temperature Coefficient of Power	- (0.44 ± 0.05) %/°C

System integrated parameters	
Maximum system voltage SCII	1000 VDC
Maximum reverse current	Do not apply external voltages larger than V_{oc} to the module

Additional data	
Junction box	1000 VDC
Connector	Plug type 4
Power tolerance	± 3%
Cable	4 mm²
Cable lengths	900 mm
Bypass diodes	3 pieces

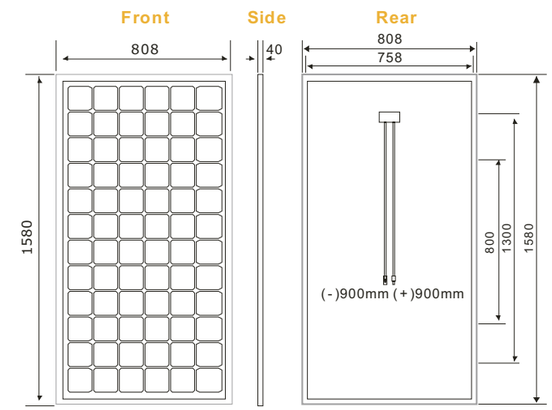

Module Construction

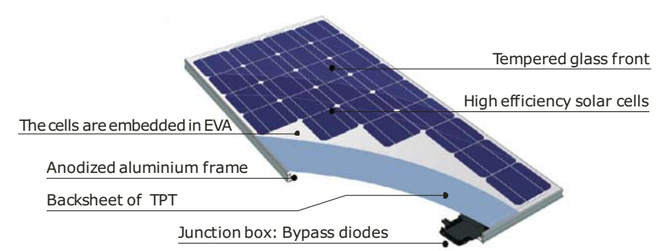

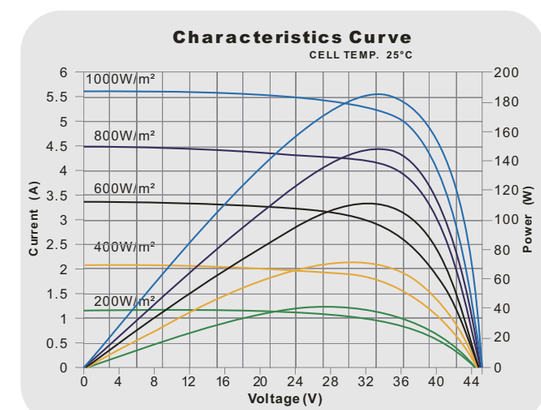

Zytech Solar reserves the right to change specifications without notice.

ISO9001

ZYTECH SOLAR - Zueco Y Technology S.L.
P. Industrial Centrovía - C/ R. Janeiro, 12
50198 La Muela (Zaragoza) SPAIN
Tel: +34 976 141819 / Fax: +34 976 141818
info@zytechsolar.com / www.zytechsolar.com

Zytech polycrystalline PV module specifications

Wp (W)	Model	Voc (V)	Isc (A)	Vmp (V)	Imp (A)	Dimensions L×W×H (mm)	Weight (kg)	Cell alignment	Cell dimensions L×W (mm)	Efficiency
65	ZT65P	21.82	4.03	18.10	3.59	992×528×35	6.5	6×6	156×78	12.41 %
85	ZT85P	14.40	7.90	11.88	7.15	1006×671×30	7.5	4×6	156×156	12.59 %
90	ZT90P	14.62	8.10	12.12	7.43	1006×671×30	7.5	4×6	156×156	13.33 %
110	ZT110P	18.12	8.00	15.00	7.33	850×992×40	10.5	6×5	156×156	13.05 %
115	ZT115P	18.42	8.21	15.33	7.50	850×992×40	10.5	6×5	156×156	13.64 %
120	ZT120P	19.49	8.10	16.16	7.43	1324×671×40	11.0	4×8	156×156	13.51 %
130	ZT130P	21.64	7.95	17.89	7.27	1482×671×40	12.5	4×9	156×156	13.07 %
135	ZT135P	21.92	8.10	18.18	7.43	1482×671×40	12.5	4×9	156×156	13.58 %
140	ZT140P	22.18	8.25	18.47	7.58	1482×671×40	12.5	4×9	156×156	14.08 %
145	ZT145P	22.39	8.40	18.72	7.75	1482×671×40	12.5	4×9	156×156	14.58 %
150	ZT150P	22.54	8.59	18.86	7.95	1482×671×40	12.5	4×9	156×156	15.08 %
155	ZT155P	25.45	8.05	21.13	7.34	1166×992×40	14.0	6×7	156×156	13.40 %
165	ZT165P	25.96	8.30	21.67	7.61	1166×992×40	14.0	6×7	156×156	14.27 %
170	ZT170P	28.80	7.90	23.76	7.15	1324×992×40	15.5	6×8	156×156	12.94 %
180	ZT180P	29.23	8.10	24.24	7.43	1324×992×40	15.5	6×8	156×156	13.70 %
185	ZT185P	29.47	8.21	24.53	7.54	1324×992×40	15.5	6×8	156×156	14.09 %
195	ZT195P	32.45	7.95	26.84	7.27	1486×992×50	18.0	6×9	156×156	13.23 %
205	ZT205P	33.05	8.15	27.43	7.47	1486×992×50	18.0	6×9	156×156	13.91 %
210	ZT210P	33.26	8.21	27.70	7.58	1486×992×50	18.0	6×9	156×156	14.25 %
225	ZT225P	36.54	8.10	30.30	7.43	1652×992×50	20.0	6×10	156×156	13.73 %
230	ZT230P	36.84	8.21	30.66	7.50	1652×992×50	20.0	6×10	156×156	14.03 %
235	ZT235P	37.08	8.30	30.96	7.59	1652×992×50	20.0	6×10	156×156	14.34 %
240	ZT240P	37.20	8.34	31.14	7.71	1652×992×50	20.0	6×10	156×156	14.65 %
245	ZT245P	37.44	8.45	31.32	7.82	1652×992×50	20.0	6×10	156×156	14.95 %
250	ZT250P	37.56	8.59	31.44	7.95	1652×992×50	20.0	6×10	156×156	15.26 %
260	ZT260P	43.27	7.95	35.78	7.27	1966×992×50	22.0	8×9	156×156	13.33 %
265	ZT265P	43.63	8.05	36.22	7.32	1966×992×50	22.0	8×9	156×156	13.59 %
270	ZT270P	43.85	8.10	36.36	7.43	1966×992×50	22.0	8×9	156×156	13.84 %
275	ZT275P	44.21	8.21	36.79	7.47	1966×992×50	22.0	8×9	156×156	14.10 %
280	ZT280P	44.35	8.25	36.94	7.58	1966×992×50	22.0	8×9	156×156	14.36 %
285	ZT285P	44.50	8.43	37.01	7.70	1966×992×50	22.0	8×9	156×156	14.61 %
290	ZT290P	44.57	8.48	37.15	7.81	1966×992×50	22.0	8×9	156×156	14.87 %
295	ZT295P	44.78	8.50	37.37	7.89	1966×992×50	22.0	8×9	156×156	15.13 %
300	ZT300P	45.07	8.59	37.73	7.95	1966×992×50	22.0	8×9	156×156	15.38 %

ZT 230p/235P/240P poly

ZYTECH MODULES

Cells	
Cell Technology	Polycrystalline silicon
Number of cells per module	60
Cell dimensions	156 × 156 mm

Mechanical Data	
Dimension of the module L×W×H	1652×992×50mm
Weight	20.0 kg

Electrical data

		ZT 230P	ZT 235P	ZT 240P
Maximum power	P_{max}	230 W	235 W	240 W
Open Circuit Voltage	V_{oc}	36.84 V	37.08 V	37.20 V
Maximum power point voltage	V_{mpp}	30.66 V	30.96 V	31.14 V
Short circuit current	I_{sc}	8.21 A	8.30 A	8.34 A
Maximum power point current	I_{mpp}	7.50 A	7.59 A	7.71 A
FF Factor		76.04 %	76.36 %	77.36 %
Module Efficiency		14.03 %	14.34 %	14.65 %

* At Standard Conditions (STC) Irradiance 1000 watt/m², spectrum AM 1,5 at a cell temperature of 25°C.

Thermal data	
NOCT	47°C ± 2°C
Temperature Coefficient of V_{oc}	- (120 ± 5) mV/°C
Temperature Coefficient of I_{sc}	+ 0.04 % / °C
Temperature Coefficient of Power	- 0.35 % / °C

System integrated parameters	
Maximum system voltage SCII	1000 VDC
Maximum reverse current	Do not apply external voltages larger than V_{oc} to the module

Additional data	
Junction box	1000 VDC
Connector	Plug type 4
Power tolerance	± 3%
Cable	4 mm²
Cable lengths	900 mm
Bypass diodes	3 pieces

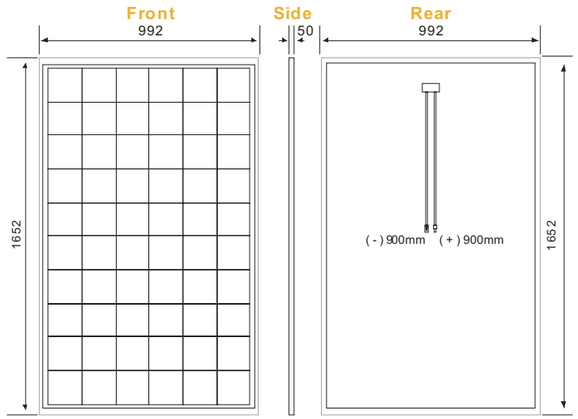

Module Construction

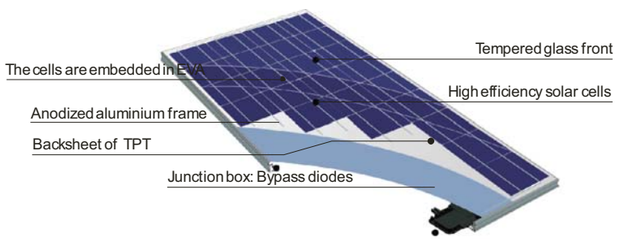

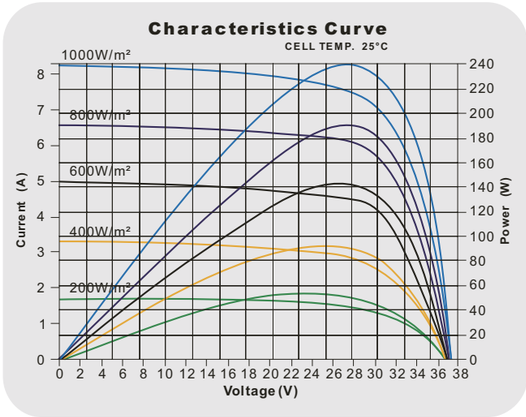

Zytech Solar reserves the right to change specifications without notice.

UL 1703 Pending

ZYTECH SOLAR - Zueco Y Technology S.L.
P. Industrial Centrovía - C/ R. Janeiro, 12
50198 La Muela (Zaragoza) SPAIN
Tel: +34 976 141819 / Fax: +34 976 141818
info@zytechsolar.com / www.zytechsolar.com

BUILDING INTEGRATED (BIPV) APPLICATIONS

The construction industry is increasingly seeking buildings with energy self-sufficiency and energy savings whilst maintaining aesthetic integration of the installations. In addition to its standard modules, Zytech offers special glass-glass modules for building integration for a range of applications: façades, roofs, shades, skylights... Zytech's special modules are normally manufactured to order based on the technical and aesthetic requirements of each project and will improve any project's thermal and acoustic insulation.

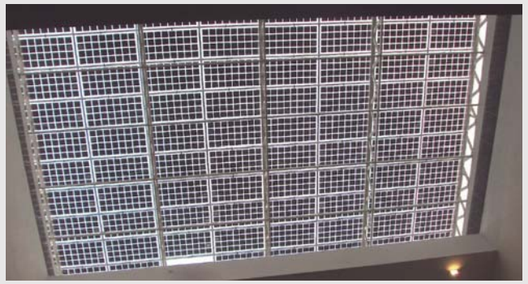

Making a better world

SPAIN
Corporate Headquarters

Zueco Y Technology S.L.
Pol. Ind. Centrovía
C/ R. Janeiro, 12
50198 La Muela (Zaragoza)
Spain
Tel. + 34 976 141819
Fax + 34 976 141818
info@zytechsolar.com

FRANCE

Zytech France
2, Rue du Parc
Z.I. Euronord
31150 Bruguieres, France
Tel. + 33 (0) 561 704 869
Fax + 33 (0) 561 707 207
info@zytechfrance.fr

ITALIA

Zytech Italia SRL
P.zza de la Repubblica, 19
20124 Milano
Italy
Tel. + 39 026 55 60 602
Fax + 39 027 83 168
info@zytechsolar.it

GERMANY
R&D, sales and main European warehouse

Zytech R&D
Braunschweiger Str.62
D-38518 Gifhorn, Germany
Tel. + 49 (0)537 1672 1607
+ 49 (0)537 1750 9164
Fax + 49 (0)537 1750 9166
germany@zytechsolar.com

BENELUX

Zytech Benelux
Admiraliteitskade 156
Rotterdam, The Netherlands
Tel. +31 610 856 676
benelux@zytechsolar.com

USA

Zytech Solar, Inc.
Palo Alto Building
530 University Av.
Palo Alto (California)
USA
Tel. + (00)1 415 315 9854
usa@zytechsolar.com

CHINA
Manufacturing plant
100% group-owned

Zytech Engineering
Technology Co. Ltd.
High Technology & Science Park
122 Zhuzhou Road
266101 Qingdao, China
Tel. + 86 532 8870 5139
Fax + 86 532 8870 5185
qingdao@zytechsolar.com

HONG KONG
Administration and transport office

Zytech Co. Ltd.
7608-3908
8 Connaught Place Central Hong Kong
Tel. + 852 8175 0040
Fax + 852 2522 4720
hongkong@zytechsolar.com

MEXICO

Zytech Mexico
Blvd. Lazaro Cardenas S/N
Quintas del Sol, local 3
Cabo San Lucas, B.C. Sur
Mexico C.P. 23450
Tel. +52 (624) 1050364
Tel. +169 869 6188
vfaz@zytechsolar.com